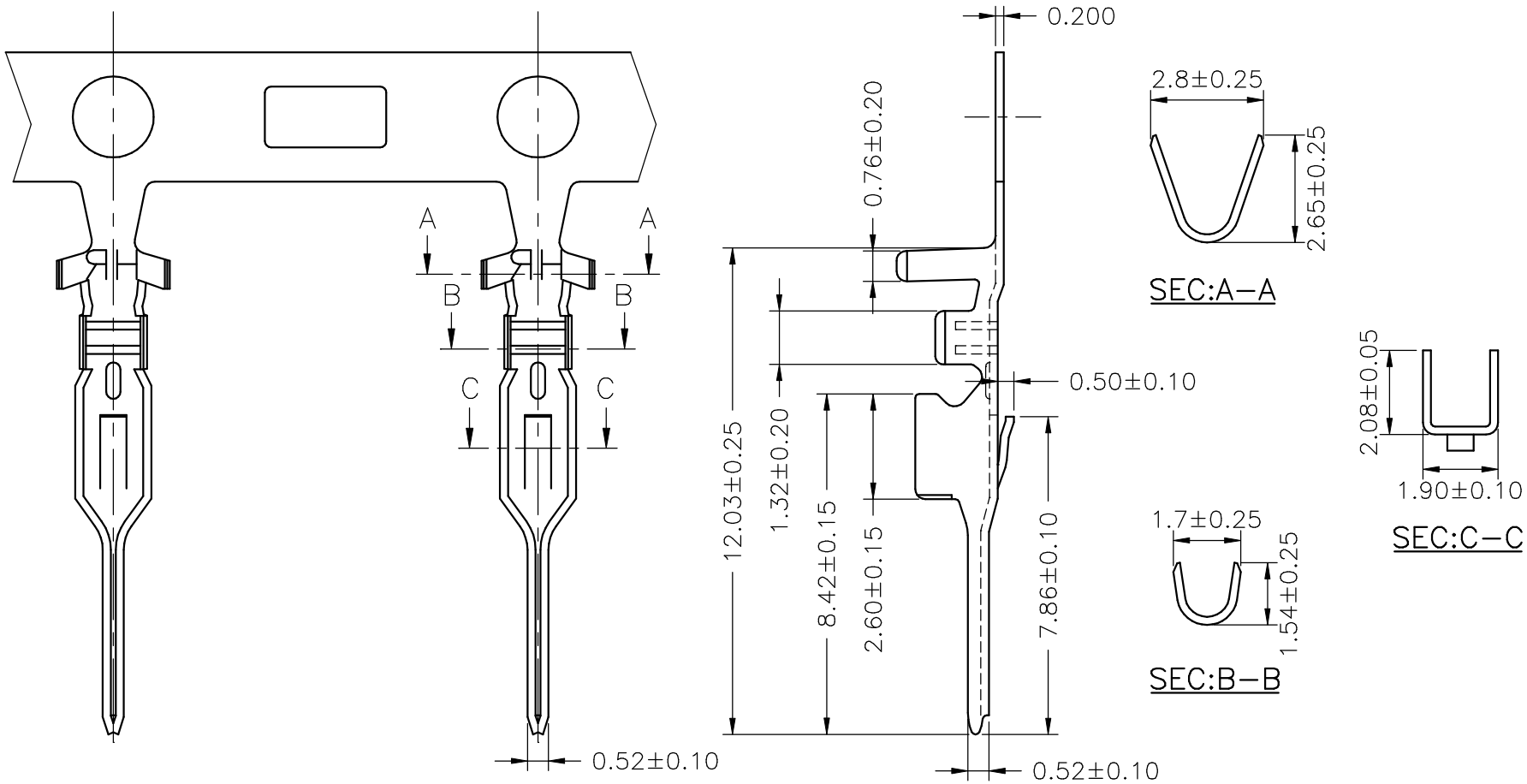

Ordering Information & Specifications

Part No	Wire Range	Insulation O.D.	Material	Finish	Qty/reel
A3500M-TPE	AWG#24-#28	1.80mm(max)	Phosphor Bronze	Tin-plated	5,000pcs

Note:E-Stamping before Tin-plated

REV.	DESCRIPTION	DATE
B1	REVISE	2006.05.19
B0	NEW RELEASE	2006.01.08

JOINT TECH ELECTRONIC IND. CO., LTD.
JOY DAY INDUSTRIAL CO., LTD.

UNIT	SCALE	SHEET
mm		1 of 1

DRAWN BY	APPROVED BY
董正一 2003.06.02	董正一 2003.06.02

GENERAL TOLERANCE
X.X±0.25
X.XX±0.15
X.XXX±0.05
ANGLE±

TITLE:

3.50mm PITCH
CRIMP TERMINAL-MALE

DRAW NO.: A3500M-XX

REV. B1