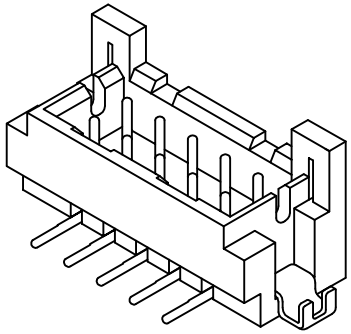

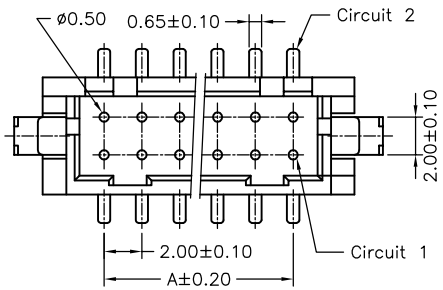

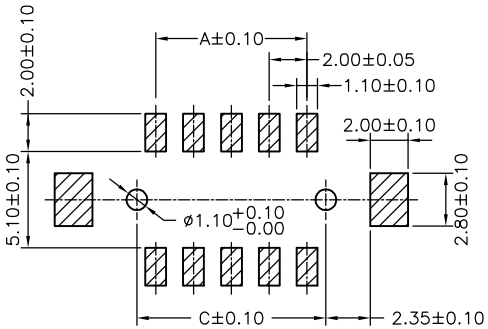

P.C.B LAYOUT

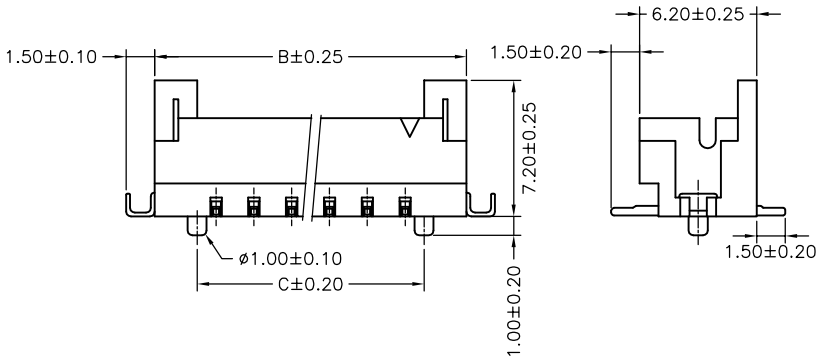

SPECIFICATIONS

Current Rating: 2A AC,DC
Voltage Rating: 250V AC,DC
Temperature Range: −25°C ~ +85°C
Contact Resistance: 30mΩ Max
Insulation Resistance: 1000MΩ Min
Withstanding Voltage: 800V AC/minute
Pin Material: Brass/Tin−plated
Solder Tabs: Brass/Tin−plated
Material: Nylon 6T,UL94V−0
Color: Natural(Beige)

Ordering Information & Dimensions

PART NO.	Dimensions		
	A	B	C
A2211WV−SF−2X02P	2.00	8.50	4.00
A2211WV−SF−2X03P	4.00	10.50	6.00
A2211WV−SF−2X04P	6.00	12.50	8.00
A2211WV−SF−2X05P	8.00	14.50	10.00
A2211WV−SF−2X06P	10.00	16.50	12.00
A2211WV−SF−2X07P	12.00	18.50	14.00
A2211WV−SF−2X08P	14.00	20.50	16.00
A2211WV−SF−2X09P	16.00	22.50	18.00
A2211WV−SF−2X10P	18.00	24.50	20.00
A2211WV−SF−2X11P	20.00	26.50	22.00
A2211WV−SF−2X12P	22.00	28.50	24.00
A2211WV−SF−2X13P	24.00	30.50	26.00
A2211WV−SF−2X14P	26.00	32.50	28.00
A2211WV−SF−2X15P	28.00	34.50	30.00
A2211WV−SF−2X16P	30.00	36.50	32.00
A2211WV−SF−2X20P	38.00	44.50	40.00

REV.	DESCRIPTION	DATE
B1	REVISE	2007.02.27
B0	NEW RELEASE	2005.12.05

JOINT TECH ELECTRONIC IND. CO., LTD.
JOY DAY INDUSTRIAL CO., LTD.

UNIT	SCALE	SHEET
mm		1 of 1

DRAWN BY	APPROVED BY
董正一 2001.02.01	董正一 2001.02.01

GENERAL TOLERANCE
X.X±0.25
X.XX±0.15
X.XXX±0.05
ANGLE±

TITLE:
2.00mm PITCH
180°WAFER-SMT TYPE

DRAW NO.: A2211WV-SF-2XNP
REV. B1